Contents

	Page
Han-Power® S with 1x Han® Q 4/2	**15.02**
Han-Power® S with 2x Han® Q 4/2	**15.04**
Han-Power® S with 1x Han® Q 8/0	**15.06**
Han-Power® S with 2x Han® Q 8/0	**15.08**
Han-Power® S with 1x Han® Q 4/2, metal	**15.10**
Han-Power® T with 3x Han® Q 4/2	**15.12**
Han-Power® T with 3x Han-Modular® Twin	**15.14**
Han-Power® T with 3x Han® Q 5/0	**15.16**
Han® Q 4/2	**15.18**
Han® Q 8/0	**15.20**
Han® Q 5/0	**15.22**
Hoods/Housings Han-Compact®	**15.24**
Han-Power® Accessories	**15.28**

Features

- 6 IDCs + PE for 2.5 mm² up to 6 mm² wire gauge
- No interuption of the energy supply
- Space-saving and compact design
- Leading protective ground within the insert
- Assembly with standard tools

Description

The Han-Power® S connector is suitable for the assembly of serial power bus. Having assembled the energy supply Han-Power® S can be inserted at any place of the power cable. The cable mantle has to be removed, the conductor is placed without interruption in the IDC.
Han-Power® S is suitable for cables with single strands manufactured acc. to DIN VDE 0281/ DIN EN 60 228 with wire gauges of 2.5 mm² up to 6 mm². For the distribution of the device Han-Compact® hoods or cable to cable housings are used. This power supply has to be realized with one Han-Compact® cable to cable hood.

Current carrying capacity

The current carrying capacity of the connectors is limited by the thermal load capability of the contact element material including the connections and the insulating parts. The derating curve is therefore valid for currents which flow constantly (non-intermittent) through each contact element of the connector evenly, without exceeding the allowed maximum temperature.
Measuring and testing techniques according to DIN EN 60 512-5

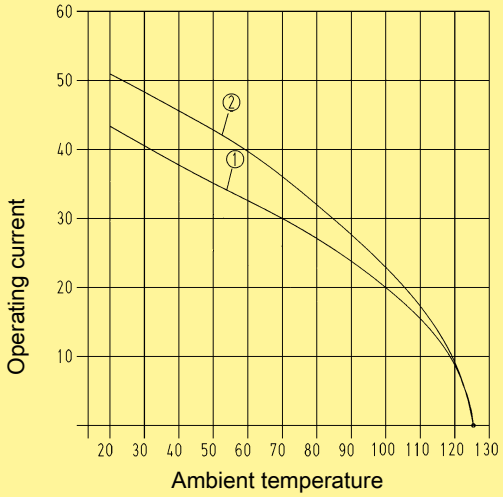

① Han® Q 4/2 Wire gauge: 4 mm²

② Han® Q 4/2 Wire gauge: 6 mm²

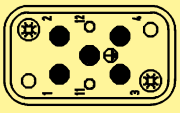

Han® Q 4/2 fully loaded with wire gauge 4x 6 mm²

Technical characteristics

Specifications	DIN EN 61 984 DIN EN 60 664-1

Han-Power® S

Number of contacts	
- Power contacts	4 + PE
- Signal contacts	2
Electrical data acc. to EN 61 984	
Power side	**40 A 400/690 V 6 kV 3**
Rated current	40 A
Rated voltage conductor - ground	400 V
Rated voltage conductor - conductor	690 V
Rated impulse voltage	6 kV
Pollution degree	3
Signal side	**10 A 250 V 4 kV 3**
Rated current	10 A
Rated voltage	250 V
Rated impulse voltage	4 kV
Pollution degree	3
Rated voltage acc. to UL/CSA	600 / 250 V
Insulation resistance	≥ 10^{10} kΩ
Material	polycarbonate
Limiting temperatures	-40 °C ... +125 °C
Flammability acc. to UL 94	V 0
Mechanical working life	
- mating cycles	≥ 500
Degree of protection acc. to DIN EN 60 529	IP 65

Contacts

Material	copper alloy
Surface	
- hard-silver plated	3 µm Ag
- hard-gold plated	2 µm Au over 3 µm Ni
Contact resistance	≤ 0.3 mΩ
Crimp terminal	
- mm²	2.5 ... 6 mm² / 0.14 ... 2.5 mm²
- AWG	14 ... 10 / 26 ... 14
Max. insulation diameter	
- Power contacts	5 mm

Cables

Design of conductor acc. to	DIN VDE 0281 DIN EN 60 228
Single strand	
Wire gauge	2.5 mm²
- Number of single strands	50 x 0.25 mm ∅
- Outer diameter	3.6 mm
Wire gauge	4 mm²
- Number of single strands	56 x 0.3 mm ∅
- Outer diameter	4.2 mm
Wire gauge	6 mm²
- Number of single strands	84 x 0.3 mm ∅
- Outer diameter	4.8 mm

with 1x Han® Q 4/2

Identification		Part number	Drawing	Dimensions in mm
Han-Power® S				
Power supply Han® Q 4/2; 1 moulded Han-Compact® Hoods	2.5 - 4 mm²	**09 12 008 4804**	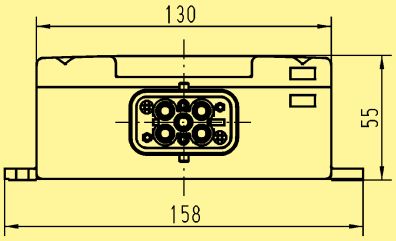	
	4 - 6 mm²	**09 12 008 4806**	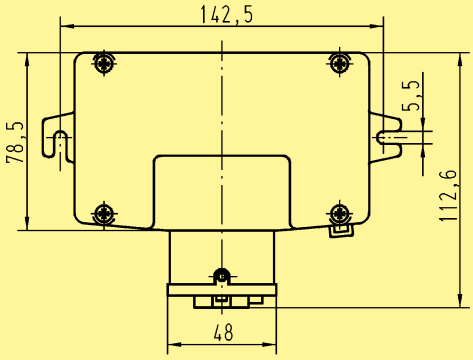	

Identification		Part number	Drawing	Dimensions in mm
System cables in fixed lengths				
Cable lengths (total length) in m pre-assembled on both sides plastic hood, black top entry cable to cable hood with male insert and hood with female insert cable: 5x 4 mm²	1.5	**20 88 641 1015**	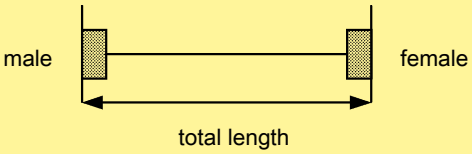	
	3	20 88 641 1030		
	5	**20 88 641 1050**		
	10	**20 88 641 1100**		
	15	**20 88 641 1150**		
	30	**20 88 641 1300**		

Stock items in bold type

Features

- 6 IDCs + PE for 4 mm² up to 6 mm² wire gauge
- No interuption of the energy supply
- Space-saving and compact design
- Leading protective ground within the insert
- Assembly with standard tools

Description

The Han-Power® S connector is suitable for the assembly of serial power bus. Having assembled the energy supply Han-Power® S can be inserted at any place of the power cable. The cable mantle has to be removed, the conductor is placed without interruption in the IDC.
Han-Power® S is suitable for cables with single strands manufactured acc. to DIN VDE 0281/ DIN EN 60 228 with wire gauges of 2.5 mm² up to 6 mm². For the distribution of the device Han-Compact® hoods or cable to cable housings are used. This power supply has to be realized with one Han-Compact® hood.

Current carrying capacity

The current carrying capacity of the connectors is limited by the thermal load capability of the contact element material including the connections and the insulating parts. The derating curve is therefore valid for currents which flow constantly (non-intermittent) through each contact element of the connector evenly, without exceeding the allowed maximum temperature.
Measuring and testing techniques according to DIN EN 60 512-5

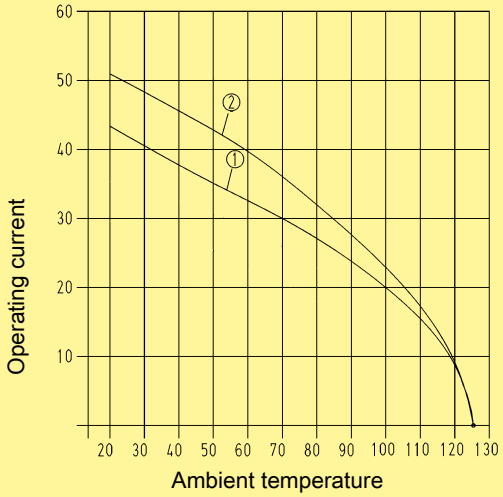

① Han® Q 4/2 Wire gauge: 4 mm²

② Han® Q 4/2 Wire gauge: 6 mm²

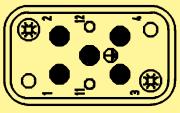

Han® Q 4/2 fully loaded with wire gauge 4x 6 mm²

Technical characteristics

Specifications	DIN EN 61 984 DIN EN 60 664-1

Han-Power® S

Number of contacts	
- Power contacts	4 + PE
- Signal contacts	2
Electrical data acc. to EN 61 984	
Power side	**40 A 400/690 V 6 kV 3**
Rated current	40 A
Rated voltage conductor - ground	400 V
Rated voltage conductor - conductor	690 V
Rated impulse voltage	6 kV
Pollution degree	3
Signal side	**10 A 250 V 4 kV 3**
Rated current	10 A
Rated voltage	250 V
Rated impulse voltage	4 kV
Pollution degree	3
Rated voltage acc. to UL/CSA	600 / 250 V
Insulation resistance	≥ 10^{10} kΩ
Material	polycarbonate
Limiting temperatures	-40 °C ... +125 °C
Flammability acc. to UL 94	V 0
Mechanical working life	
- mating cycles	≥ 500
Degree of protection acc. to DIN EN 60 529	IP 65

Contacts

Material	copper alloy
Surface	
- hard-silver plated	3 µm Ag
- hard-gold plated	2 µm Au over 3 µm Ni
Contact resistance	≤ 0.3 mΩ
Crimp terminal	
- mm²	4 ... 6 mm² / 0.14 ... 2.5 mm²
- AWG	14 ... 10 / 26 ... 14
Max. insulation diameter	
- Power contacts	5 mm

Cables

Design of conductor acc. to	DIN VDE 0281 DIN EN 60 228
Single strand	
Wire gauge	4 mm²
- Number of single strands	56 x 0.3 mm ∅
- Outer diameter	4.2 mm
Wire gauge	6 mm²
- Number of single strands	84 x 0.3 mm ∅
- Outer diameter	4.8 mm

with 2x Han® Q 4/2

Identification		Part number	Drawing	Dimensions in mm
Han-Power® S Power supply Han® Q 4/2; 2 screwed Han-Compact® Housings, bulkhead mounting	4 - 6 mm²	**09 12 008 4807**	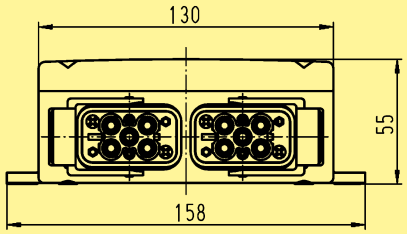 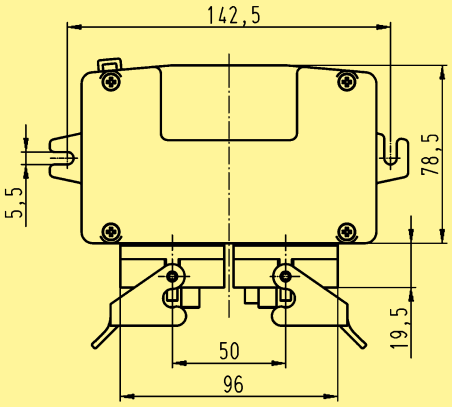	

Identification		Part number	Drawing	Dimensions in mm
System cables in fixed lengths			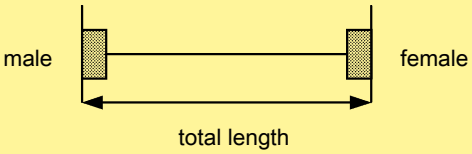	
Cable lengths (total length) in m	1.5	**20 88 641 1015**		
pre-assembled on both sides	3	20 88 641 1030		
plastic hood, black	5	**20 88 641 1050**		
top entry	10	**20 88 641 1100**		
cable to cable hood with male insert	15	**20 88 641 1150**		
and hood with female insert	30	**20 88 641 1300**		
cable: 5x 4 mm²				

Stock items in bold type

Features

- 6 IDCs + PE for 2.5 mm² up to 6 mm² wire gauge
- No interuption of the energy supply
- Space-saving and compact design
- Leading protective ground within the insert
- Assembly with standard tools

Description

The Han-Power® S connector is suitable for the assembly of serial power bus. Having assembled the energy supply Han-Power® S can be inserted at any place of the power cable. The cable mantle has to be removed, the conductor is placed without interruption in the IDC.
Han-Power® S is suitable for cables with single strands manufactured acc. to DIN VDE 0281/ DIN EN 60 228 with wire gauges of 2.5 mm² up to 6 mm². For the distribution of the device Han-Compact® hoods or cable to cable housings are used. This power supply has to be realized with one Han-Compact® cable to cable hood.

Current carrying capacity

The current carrying capacity of the connectors is limited by the thermal load capability of the contact element material including the connections and the insulating parts. The derating curve is therefore valid for currents which flow constantly (non-intermittent) through each contact element of the connector evenly, without exceeding the allowed maximum temperature.
Measuring and testing techniques according to DIN EN 60 512-5

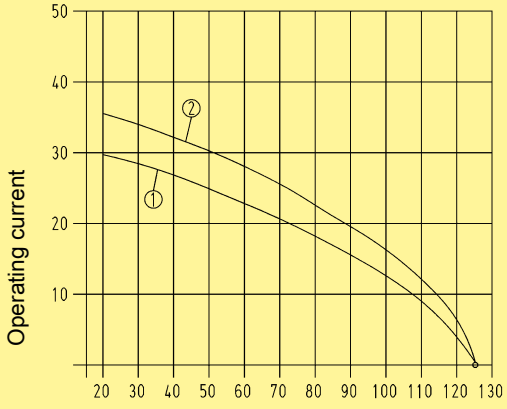

① Han® Q 8/0 Wire gauge: 2.5 mm²

② Han® Q 8/0 Wire gauge: 4 mm²

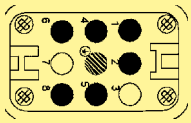

Han® Q 8/0 partly loaded with wire gauge 7x 4 mm²

Technical characteristics

Specifications	DIN EN 61 984 DIN EN 60 664-1

Han-Power® S

Number of contacts	
- Power contacts	6 + PE
Electrical data	
acc. to EN 61 984	**25 A 500 V 6 kV 3**
Rated current	25 A
Rated voltage	500 V
Rated impulse voltage	6 kV
Pollution degree	3
Rated voltage	
acc. to UL/CSA	600 V
Insulation resistance	≥ 10^{10} kΩ
Material	polycarbonate
Limiting temperatures	-40 °C ... +125 °C
Flammability acc. to UL 94	V 0
Mechanical working life	
- mating cycles	≥ 500
Degree of protection acc. to DIN EN 60 529	IP 65

Contacts

Material	copper alloy
Surface	
- hard-silver plated	3 µm Ag
Contact resistance	≤ 1 mΩ
Crimp terminal	
- mm²	2.5 ... 6 mm²
- AWG	14 ... 10

Cables

Design of conductor acc. to	DIN VDE 0281 DIN EN 60 228
<u>Single strand</u>	
Wire gauge	2.5 mm²
- Number of single strands	50 x 0.25 mm ∅
- Outer diameter	3.6 mm
Wire gauge	4 mm²
- Number of single strands	56 x 0.3 mm ∅
- Outer diameter	4.2 mm
Wire gauge	6 mm²
- Number of single strands	84 x 0.3 mm ∅
- Outer diameter	4.8 mm

with 1x Han® Q 8/0

Identification		Part number	Drawing	Dimensions in mm
Han-Power® S				
Power supply Han® Q 8/0; 1 moulded Han-Compact® Hoods	2.5 - 4 mm²	**09 12 008 4801**	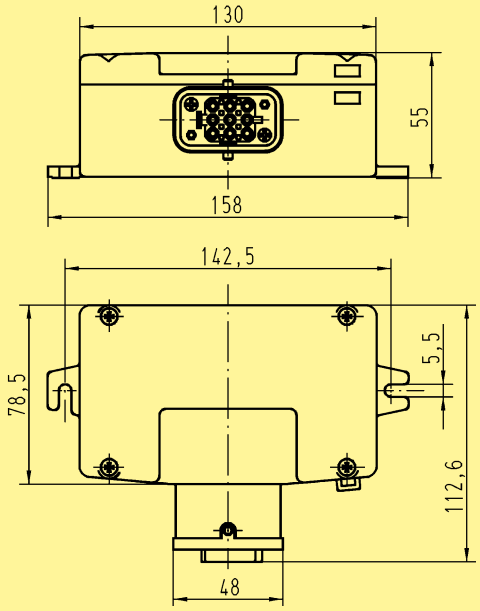	
	4 - 6 mm²	09 12 008 4811		

Identification		Part number	Drawing	Dimensions in mm
System cables in fixed lengths				
Cable lengths (total length) in m pre-assembled on both sides plastic hood, black top entry cable to cable hood with male insert and hood with female insert cable: 7x 2.5 mm²	1.5 3 5 10 15 30	20 88 841 0015 **20 88 841 0030** 20 88 841 0050 **20 88 841 0100** **20 88 841 0150** **20 88 841 0300**	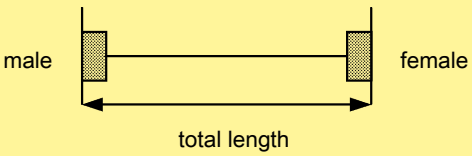	

Stock items in bold type

Features

- 6 IDCs + PE for 2.5 mm² up to 4 mm² wire gauge
- No interuption of the energy supply
- Space-saving and compact design
- Leading protective ground within the insert
- Assembly with standard tools

Description

The Han-Power® S connector is suitable for the assembly of serial power bus. Having assembled the energy supply Han-Power® S can be inserted at any place of the power cable. The cable mantle has to be removed, the conductor is placed without interruption in the IDC.
Han-Power® S is suitable for cables with single strands manufactured acc. to DIN VDE 0281/ DIN EN 60 228 with wire gauges of 2.5 mm² up to 6 mm². For the distribution of the device Han-Compact® hoods or cable to cable housings are used. This power supply has to be realized with two Han-Compact® hoods.

Current carrying capacity

The current carrying capacity of the connectors is limited by the thermal load capability of the contact element material including the connections and the insulating parts. The derating curve is therefore valid for currents which flow constantly (non-intermittent) through each contact element of the connector evenly, without exceeding the allowed maximum temperature.
Measuring and testing techniques according to DIN EN 60 512-5

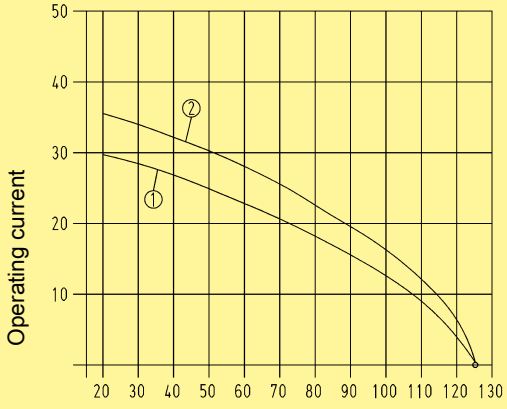

① Han® Q 8/0 Wire gauge: 2.5 mm²

② Han® Q 8/0 Wire gauge: 4 mm²

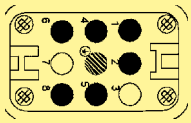

Han® Q 8/0 partly loaded with wire gauge 7x 4 mm²

Technical characteristics

Specifications	DIN EN 61 984 DIN EN 60 664-1

Han-Power® S

Number of contacts	
- Power contacts	6 + PE
Electrical data	
acc. to EN 61 984	**25 A 500 V 6 kV 3**
Rated current	25 A
Rated voltage	500 V
Rated impulse voltage	6 kV
Pollution degree	3
Rated voltage	
acc. to UL/CSA	600 V
Insulation resistance	≥ 10^{10} kΩ
Material	polycarbonate
Limiting temperatures	-40 °C ... +125 °C
Flammability acc. to UL 94	V 0
Mechanical working life	
- mating cycles	≥ 500
Degree of protection acc. to DIN EN 60 529	IP 65

Contacts

Material	copper alloy
Surface	
- hard-silver plated	3 µm Ag
Contact resistance	≤ 1 mΩ
Crimp terminal	
- mm²	2.5 ... 4 mm²
- AWG	14 ... 12

Cables

Design of conductor acc. to	DIN VDE 0281 DIN EN 60 228
<u>Single strand</u>	
Wire gauge	2.5 mm²
- Number of single strands	50 x 0.25 mm ∅
- Outer diameter	3.6 mm
Wire gauge	4 mm²
- Number of single strands	56 x 0.3 mm ∅
- Outer diameter	4.2 mm

Power Distribution

with 2x Han® Q 8/0

Identification		Part number	Drawing	Dimensions in mm
Han-Power® S Power supply Han® Q 8/0; 2 screwed Han-Compact® Housings, bulkhead mounting	2.5 - 4 mm²	**09 12 008 4802**	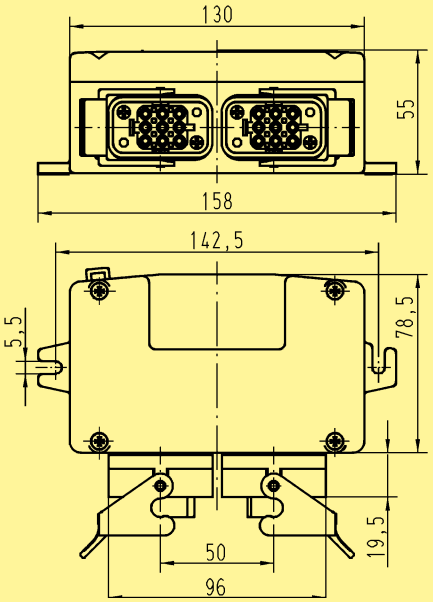	

Identification		Part number	Drawing	Dimensions in mm
System cables in fixed lengths			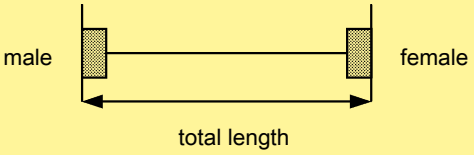	
Cable lengths (total length) in m pre-assembled on both sides plastic hood, black top entry hood on both sides cable: 7x 2.5 mm²	1.5 3 5 10 15 30	20 88 821 0015 20 88 821 0030 20 88 821 0050 20 88 821 0100 20 88 821 0150 20 88 821 0300		

Stock items in bold type

Han-Power® S with 1x Han® Q 4/2, metal

Features

- 6 IDCs/screw terminals + PE for 4 mm² up to 6 mm² wire gauge; 4 IDCs + PE for 10 mm² wire gauge
- No interuption of the energy supply
- Space-saving and compact design
- Leading protective ground within the insert
- Assembly with standard tools

Description

Han-Power® S metal version allows the realisation of applications where a high degree of protection is required against dust, splashed water and mechanical shock. This new variant continues to support the user in providing simple installation and maintenance practices but now offers greater protection against harsh industrial environments.
Han-Power® S metal offers optimal handling characteristics and now features an increased wire gauge range. It is now possible to realise power distribution networks with wire gauge up to 10 mm².
This power supply has to be realized with one Han-Compact® hood.

Current carrying capacity

The current carrying capacity of the connectors is limited by the thermal load capability of the contact element material including the connections and the insulating parts. The derating curve is therefore valid for currents which flow constantly (non-intermittent) through each contact element of the connector evenly, without exceeding the allowed maximum temperature.
Measuring and testing techniques according to DIN EN 60 512-5

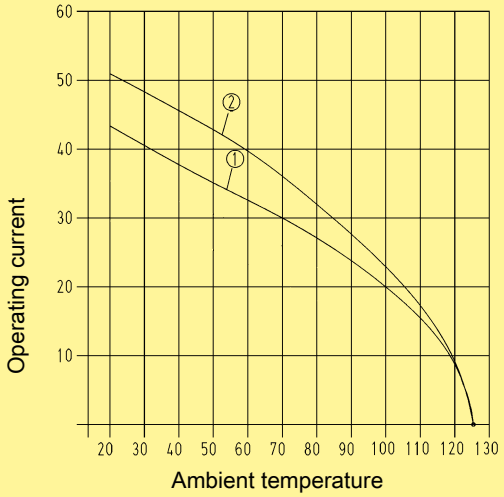

① Han® Q 4/2 Wire gauge: 4 mm²

② Han® Q 4/2 Wire gauge: 6 mm²

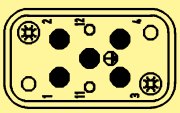

Han® Q 4/2 fully loaded with wire gauge 4x 6 mm²

Technical characteristics

Specifications	DIN EN 61 984 DIN EN 60 664-1

Han-Power® S

Number of contacts	
- Power contacts	4 + PE
- Signal contacts	2
Electrical data acc. to EN 61 984	
Power side	**40 A 400/690 V 6 kV 3**
Rated current	40 A
Rated voltage conductor - ground	400 V
Rated voltage conductor - conductor	690 V
Rated impulse voltage	6 kV
Pollution degree	3
Signal side	**10 A 250 V 4 kV 3**
Rated current	10 A
Rated voltage	250 V
Rated impulse voltage	4 kV
Pollution degree	3
Rated voltage acc. to UL/CSA	600 / 250 V
Insulation resistance	≥ 10^{10} kΩ
Material	aluminium die-cast
Limiting temperatures	-40 °C ... +125 °C
Flammability acc. to UL 94	V 0
Mechanical working life	
- mating cycles	≥ 500
Degree of protection acc. to DIN EN 60 529	IP 65

Contacts

Material	copper alloy
Surface	
- hard-silver plated	3 µm Ag
- hard-gold plated	2 µm Au over 3 µm Ni
Contact resistance	≤ 0.3 mΩ
Crimp terminal	
- mm²	4 ... 10 mm² / 0.14 ... 2.5 mm²
- AWG	12 ... 8 / 26 ... 14
Max. insulation diameter	
- Power contacts	5 mm

Cables

Design of conductor acc. to	DIN VDE 0281 DIN EN 60 228
Single strand	
Wire gauge	4 mm²
- Number of single strands	56 x 0.3 mm ∅
- Outer diameter	4.2 mm
Wire gauge	6 mm²
- Number of single strands	84 x 0.3 mm ∅
- Outer diameter	4.8 mm
Wire gauge	10 mm²
- Number of single strands	80 x 0.4 mm ∅
- Outer diameter	6.3 mm

with 1x Han® Q 4/2, metal

Identification		Part number	Drawing	Dimensions in mm
Han-Power® S Power supply Han® Q 4/2; 1 screwed Han-Compact® Housings, bulkhead mounting	4 - 6 mm²	**09 12 008 4901**	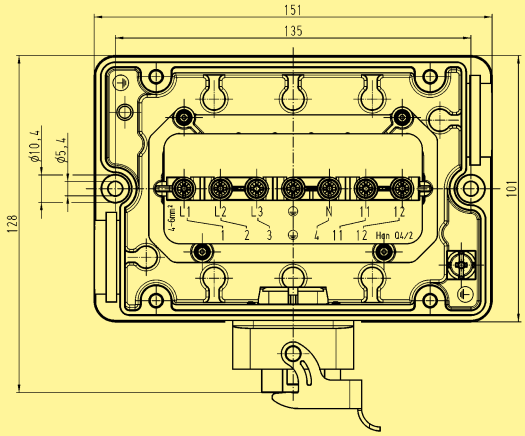	
	10 mm²	**09 12 008 4951**	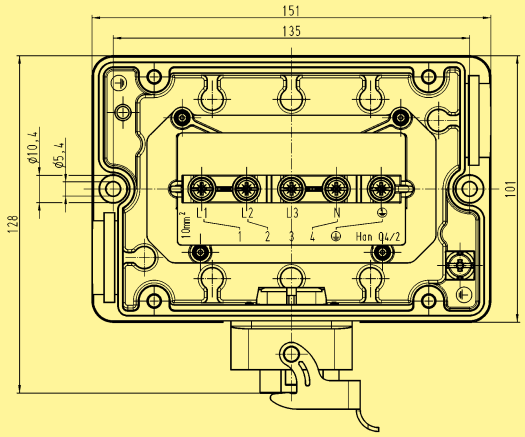	

Stock items in bold type

Features

- Per 1 connection for power input, power output and to device
- Male and female inserts finger protected
- 4 power contacts; 2 signal contacts
- Metal housing
- Locking lever stainless steel

Current carrying capacity

The current carrying capacity of the connectors is limited by the thermal load capability of the contact element material including the connections and the insulating parts. The derating curve is therefore valid for currents which flow constantly (non-intermittent) through each contact element of the connector evenly, without exceeding the allowed maximum temperature.

Measuring and testing techniques according to DIN EN 60 512-5

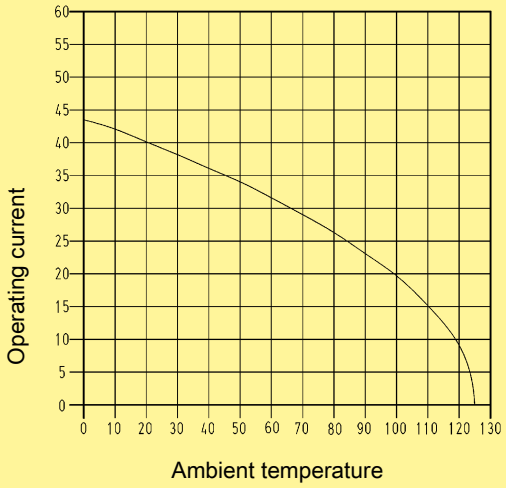

Wire gauge: 4 mm²

Technical characteristics

Specifications	DIN EN 61 984 DIN EN 60 664-1

Han-Power® T

Number of contacts	
- Power contacts	4 + PE
- Signal contacts	2
Electrical data acc. to EN 61 984	
Power side	**40 A 400/690 V 6 kV 3**
Rated current	40 A
Rated voltage conductor - ground	400 V
Rated voltage conductor - conductor	690 V
Rated impulse voltage	6 kV
Pollution degree	3
Signal side	**10 A 250 V 4 kV 3**
Rated current	10 A
Rated voltage	250 V
Rated impulse voltage	4 kV
Pollution degree	3
Rated voltage acc. to UL/CSA	600 / 250 V
Insulation resistance	≥ 10^{10} Ω
Material	zinc die-cast
Limiting temperatures	-40 °C ... +125 °C
Flammability acc. to UL 94	V 0
Mechanical working life	
- mating cycles	≥ 500
Degree of protection acc. to DIN EN 60 529	IP 65

Contacts

Material	copper alloy
Surface	
- hard-silver plated	3 µm Ag
- hard-gold plated	2 µm Au over 3 µm Ni
Contact resistance	≤ 0.3 mΩ
Crimp terminal	
- mm²	4 ... 6 mm² / 0.14 ... 2.5 mm²
- AWG	12 ... 10 / 26 ... 14
Max. insulation diameter	
- Power contacts	5 mm

with 3x Han® Q 4/2

Identification		Part number	Drawing	Dimensions in mm
Han-Power® T Power supply with 3x Han® Q 4/2 in Han-Compact® Housings, bulkhead mounting	4 mm²	**09 12 008 4720**	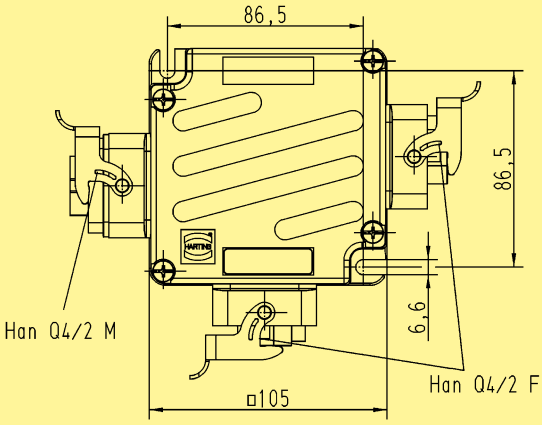	

Stock items in bold type

Features

- 1 connection for power input and power output each
- 1 T-connection to device
- 3 power contacts; 4 signal contacts
- Metal housing
- Locking lever Han-Easy Lock®

Technical characteristics

Specifications	DIN EN 61 984 DIN EN 60 664-1

Han-Power® T

Number of contacts	
- Power contacts	3
- Signal contacts	4
Electrical data acc. to EN 61 984	
Power side	**40 A 400/690 V 6 kV 3**
Rated current	40 A
Rated voltage conductor - ground	400 V
Rated voltage conductor - conductor	690 V
Rated impulse voltage	6 kV
Pollution degree	3
Signal side	**16 A 400 V 6 kV 3**
Rated current	16 A
Rated voltage	400 V
Rated impulse voltage	6 kV
Pollution degree	3
Rated voltage acc. to UL/CSA	600 / V
Insulation resistance	≥ 10^{10} Ω
Material	zinc die-cast
Limiting temperatures	-40 °C ... +125 °C
Flammability acc. to UL 94	V 0
Mechanical working life	
- mating cycles	≥ 500
Degree of protection acc. to DIN EN 60 529	IP 65

Contacts

Han® C module with Crimp terminal *

Number of contacts	3
Electrical data acc. to EN 61 984	**40 A 400/690 V 6 kV 3**
Material	polycarbonate
Insulation resistance	≥ 10^{10} Ω
Temperature range	-40 °C ... +125 °C
Flammability acc. to UL 94	V 0
Crimp terminal	
- mm²	2.5 ... 6 mm²
- AWG	14 ... 10

Han® EE module with Crimp terminal *

Number of contacts	8
Electrical data acc. to EN 61 984	**16 A 400 V 6 kV 3**
Material	polycarbonate
Insulation resistance	≥ 10^{10} Ω
Temperature range	-40 °C ... +125 °C
Flammability acc. to UL 94	V 0
Crimp terminal	
- mm²	0.14 ... 2.5 mm²
- AWG	26 ... 14

* for more technical details see chapter 06

with 3x Han-Modular® Twin

Identification	Part number	Drawing	Dimensions in mm
Han-Power® T Power supply with 3x Han-Modular® Twin 	**09 12 008 4760**	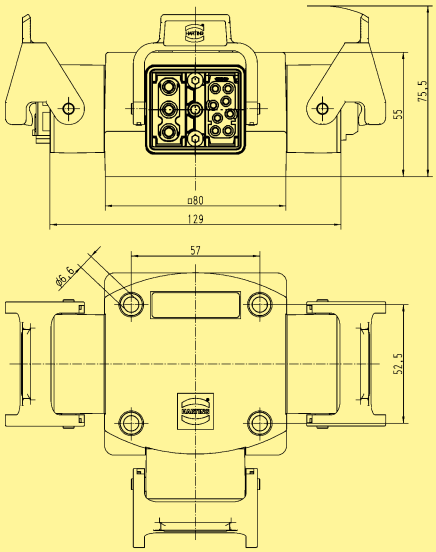	

Stock items in bold type

Features

- Per 1 connection for power input, power output and to device
- 4 power contacts
- Plastic housings are integrated in the moulding
- Compact design

Current carrying capacity

The current carrying capacity of the connectors is limited by the thermal load capability of the contact element material including the connections and the insulating parts. The derating curve is therefore valid for currents which flow constantly (non-intermittent) through each contact element of the connector evenly, without exceeding the allowed maximum temperature.

Measuring and testing techniques according to DIN EN 60 512-5

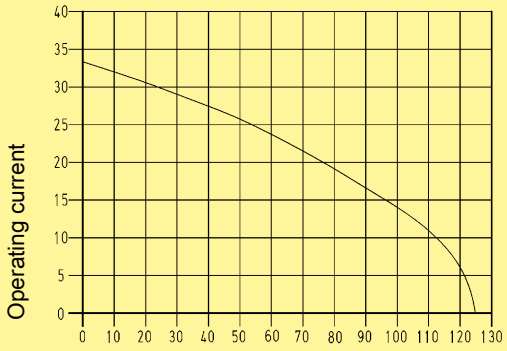

Wire gauge: 2.5 mm²

Technical characteristics

Specifications	DIN EN 61 984 DIN EN 60 664-1

Han-Power® T

Number of contacts	
- Power contacts	4 + PE
Electrical data	
acc. to EN 61 984	**16 A 230/400 V 4 kV 3**
Rated current	16 A
Rated voltage conductor - ground	230 V
Rated voltage conductor - conductor	400 V
Rated impulse voltage	4 kV
Pollution degree	3
Rated voltage	
acc. to UL/CSA	600 V
Insulation resistance	≥ 10^{10} Ω
Material	polycarbonate
Limiting temperatures	-40 °C ... +125 °C
Flammability acc. to UL 94	V 0
Mechanical working life	
- mating cycles	≥ 500
Degree of protection acc. to DIN EN 60 529	IP 65 / IP 67

Contacts

Material	copper alloy
Surface	
- hard-silver plated	3 µm Ag
- hard-gold plated	2 µm Au over 3 µm Ni
Contact resistance	≤ 1 mΩ
Crimp terminal	
- mm²	0.14 ... 2.5 mm²
- AWG	26 ... 14

with 3x Han® Q 5/0

Identification	Part number	Drawing	Dimensions in mm
	09 12 008 4751	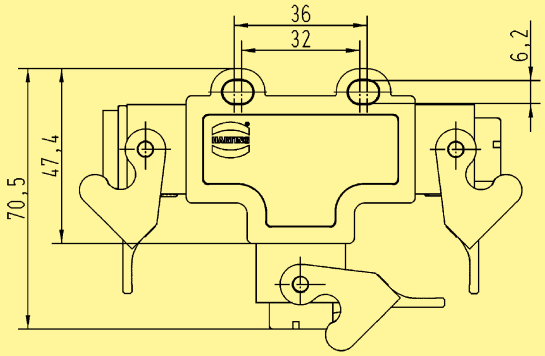	

Stock items in bold type

Features

- 4 power contacts Han® C and 2 signal contacts Han D®
- Finger protection
- Leading protective ground with crimp terminal
- Inserts suitable for metal and plastic hoods and housings of Han-Compact® series (not suitable for 19 12 008 0501, 19 12 708 0501 and 19 12 008 0502)
- 3 coding possibilities by using a coding pin instead of fixing screw

Current carrying capacity

The current carrying capacity of the connectors is limited by the thermal load capability of the contact element material including the connections and the insulating parts. The derating curve is therefore valid for currents which flow constantly (non-intermittent) through each contact element of the connector evenly, without exceeding the allowed maximum temperature.

Measuring and testing techniques according to DIN EN 60 512-5

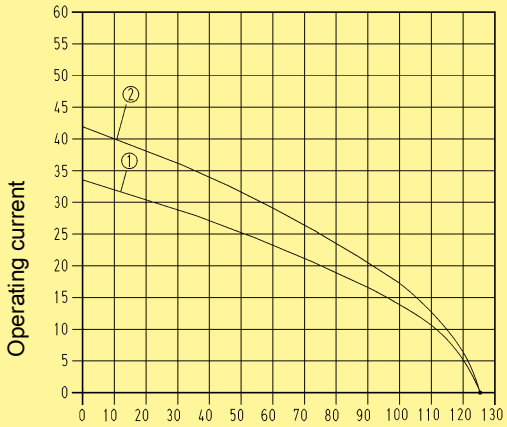

Wire gauge: ① 2.5 mm²
② 4 mm²

Technical characteristics

Specifications	DIN EN 60 664-1 DIN EN 61 984
Approvals	c UL us

Inserts

Number of contacts	4 / 2 + PE
Electrical data acc. to EN 61 984	
Power side	**40 A 400/690 V 6 kV 3**
Rated current	40 A
Rated voltage conductor - ground	400 V
Rated voltage conductor - conductor	690 V
Rated impulse voltage	6 kV
Pollution degree	3
Signal side	**10 A 250 V 4 kV 3**
Rated current	10 A
Rated voltage	250 V
Rated impulse voltage	4 kV
Pollution degree	3
Rated voltage acc. to UL/CSA	600 / 250 V
Insulation resistance	≥ 10^{10} Ω
Material	polycarbonate
Limiting temperatures	-40 °C ... +125 °C
Flammability acc. to UL 94	V 0
Mechanical working life - mating cycles	≥ 500

Contacts

Material	copper alloy
Surface	
- hard-silver plated	3 µm Ag
- hard-gold plated	2 µm Au over 3 µm Ni
Contact resistance	≤ 0.3 mΩ
Crimp terminal	
- mm²	1.5 ... 6 mm² / 0.14 ... 2.5 mm²
- AWG	16 ... 10 / 26 ... 14
Max. insulation diameter	
- Power contacts	5 mm

Hoods/Housings

Plastic hoods/housings

Material	polycarbonate
Locking element	Polyamide
Hoods/Housings sealing	NBR
Limiting temperatures	-40 °C ... +125 °C
Flammability acc. to UL 94	V 0
Degree of protection acc. to DIN EN 60 529 for coupled connector	IP 65

Accessories

Crimping tools	chapter 99

Power Distribution

Number of contacts

4/2 + ⏚

Identification	Part number Male insert (M)	Part number Female insert (F)	Drawing	Dimensions in mm
Crimp terminal Order crimp contacts separately	**09 12 006 3041**	**09 12 006 3141**	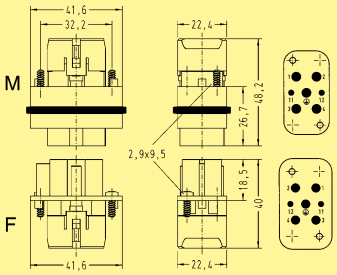 Contact arrangement view from termination side	

Identification	Wire gauge (mm²)	Part number Male contact	Part number Female contact	Drawing	Dimensions in mm
Crimp contacts					
Han® C contacts Power contacts silver plated	1.5	**09 32 000 6104**	**09 32 000 6204**		
	2.5	**09 32 000 6105**	**09 32 000 6205**		
	4	**09 32 000 6107**	**09 32 000 6207**		
	6	**09 32 000 6108**	**09 32 000 6208**		
Han D® contacts Signal contacts silver plated	0.14-0.37	**09 15 000 6104**	**09 15 000 6204**		
	0.5	**09 15 000 6103**	**09 15 000 6203**		
	0.75	**09 15 000 6105**	**09 15 000 6205**		
	1	**09 15 000 6102**	**09 15 000 6202**		
	1.5	**09 15 000 6101**	**09 15 000 6201**		
	2.5	**09 15 000 6106**	**09 15 000 6206**		
gold plated	0.14-0.37	**09 15 000 6124**	**09 15 000 6224**		
	0.5	**09 15 000 6123**	**09 15 000 6223**		
	0.75	**09 15 000 6125**	**09 15 000 6225**		
	1	**09 15 000 6122**	**09 15 000 6222**		
	1.5	**09 15 000 6121**	**09 15 000 6221**		
	2.5	**09 15 000 6126**	**09 15 000 6226**		

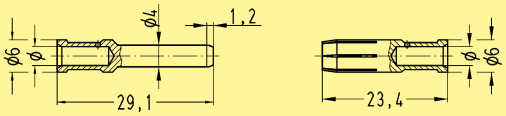

Wire gauge			∅	Stripping length
1.5	mm²	AWG 16	1.75	9 mm
2.5	mm²	AWG 14	2.25	9 mm
4	mm²	AWG 12	2.85	9.6 mm
6	mm²	AWG 10	3.5	9.6 mm

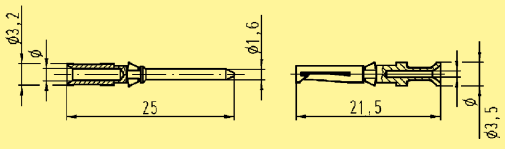

Wire gauge			∅	Stripping length
0.14-0.37	mm²	AWG 26-22	0.9	8 mm
0.5	mm²	AWG 20	1.1	8 mm
0.75	mm²	AWG 18	1.3	8 mm
1	mm²	AWG 18	1.45	8 mm
1.5	mm²	AWG 16	1.75	8 mm
2.5	mm²	AWG 14	2.25	6 mm

Stock items in bold type

Features

- 8 contact chambers for crimp contacts of Han E® series
- Space-saving and compact design
- Leading protective ground with crimp terminal
- Inserts suitable for metal and plastic hoods and housings of Han-Compact® series
- ISO 23 570 / DESINA conform product

Current carrying capacity

The current carrying capacity of the connectors is limited by the thermal load capability of the contact element material including the connections and the insulating parts. The derating curve is therefore valid for currents which flow constantly (non-intermittent) through each contact element of the connector evenly, without exceeding the allowed maximum temperature.

Measuring and testing techniques according to DIN EN 60 512-5

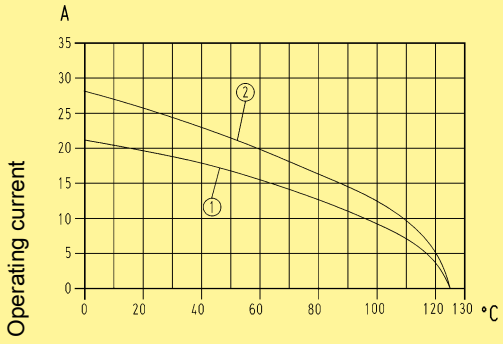

Ambient temperature

Wire gauge: ① 1.5 mm²
② 2.5 mm²

Technical characteristics

Specifications	DIN EN 60 664-1 DIN EN 61 984
Approvals	c UL us

Inserts

Number of contacts	8 + PE
Electrical data acc. to EN 61 984	
Mounted plastic hood	**16 A 500 V 6 kV 3**
Rated current	16 A
Rated voltage	500 V
Rated impulse voltage	6 kV
Pollution degree	3
Pollution degree 2 also	16 A 400/690 V 6 kV 2
Mounted metal hood	16 A 230/400 V 4 kV 3
Rated voltage acc. to UL/CSA	500 V
Insulation resistance	≥ 10^{10} Ω
Material	polycarbonate
Limiting temperatures	-40 °C ... 125 °C
Flammability acc. to UL 94	V 0
Mechanical working life	
- mating cycles	≥ 500

Contacts

Material	copper alloy
Surface	
- hard-silver plated	3 µm Ag
- hard-gold plated	2 µm Au over 3 µm Ni
Contact resistance	≤ 1 mΩ
Crimp terminal	
- mm²	0.14 ... 4 mm² partly loaded up to 4 mm² is possible
- AWG	26 ... 12

Hoods/Housings

Plastic hoods/housings

Material	polycarbonate
Locking element	Polyamide
Hoods/Housings sealing	NBR
Limiting temperatures	-40 °C ... 125 °C
Flammability acc. to UL 94	V 0
Degree of protection acc. to DIN EN 60 529 for coupled connector	IP 65

Hoods/Housings, metal

Material	zinc die-cast
Locking element	Stainless steel
Hoods/Housings sealing	NBR
Limiting temperatures	-40 °C ... 125 °C
Degree of protection acc. to DIN EN 60 529 for coupled connector	IP 65

Accessories

Crimping tools	chapter 99

Number of contacts

8 + ⏚

Identification	Part number Male insert (M)	Part number Female insert (F)	Drawing	Dimensions in mm
Crimp terminal Order crimp contacts separately	**09 12 008 3001**	**09 12 008 3101**	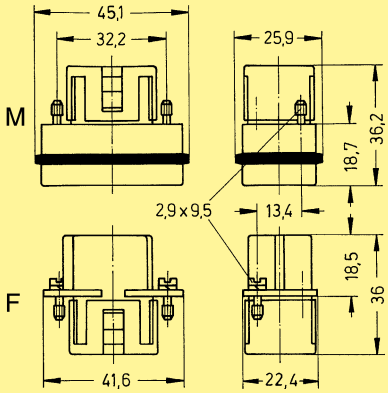 Contact arrangement view from termination side	
Coding pin		09 33 000 9954	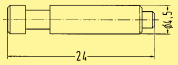	Use of the coding pin prevents incorrect mating to other connectors of the same type. The male pin should be omitted from the opposing cavity in the male insert.

Identification	Wire gauge (mm²)	Part number Male contact	Part number Female contact	Drawing	Dimensions in mm
Crimp contacts Power contacts				Operating contact Identification / Relay contact	
silver plated	0.14-0.37	09 33 000 6127	09 33 000 6227	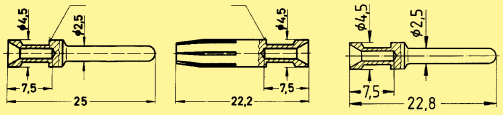	
	0.5	**09 33 000 6121**	**09 33 000 6220**		
	0.75	**09 33 000 6114**	**09 33 000 6214**		
	1	**09 33 000 6105**	**09 33 000 6205**		
	1.5	**09 33 000 6104**	**09 33 000 6204**		
	2.5	**09 33 000 6102**	**09 33 000 6202**		
	4	**09 33 000 6107**	**09 33 000 6207**		
gold plated	0.14-0.37	**09 33 000 6117**	**09 33 000 6217**		
	0.5	**09 33 000 6122**	**09 33 000 6222**		
	0.75	**09 33 000 6115**	**09 33 000 6215**		
	1	**09 33 000 6118**	**09 33 000 6218**		
	1.5	**09 33 000 6116**	**09 33 000 6216**		
	2.5	**09 33 000 6123**	**09 33 000 6223**		
	4	09 33 000 6119	**09 33 000 6221**		
Relay contact silver plated	0.75-1	09 33 000 6109			
	1.5	09 33 000 6110			
	2.5	09 33 000 6111			
F.O. contacts for 1 mm plastic fibre		20 10 001 3311	20 10 001 3321	Crimp zone / Crimp zone 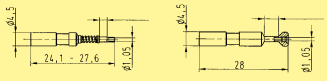	

Identification	Wire gauge			Stripping length
no groove	0.14-0.37	mm²	AWG 26-22	7.5 mm
no groove	0.5	mm²	AWG 20	7.5 mm
1 groove*	0.75	mm²	AWG 18	7.5 mm
1 groove	1	mm²	AWG 18	7.5 mm
2 grooves	1.5	mm²	AWG 16	7.5 mm
3 grooves	2.5	mm²	AWG 14	7.5 mm
no groove	4	mm²	AWG 12	7.5 mm

* on the back crimp collar

Crimp contacts 0.14 ... 0.37 mm² only used with BUCHANAN crimping tool 09 99 000 0001

Stock items in bold type

Features

- 5 contact chambers for crimp contacts of Han E® series
- Space-saving and compact design
- Leading protective ground with screw terminal
- Compatible with plastic and metal hoods of series Han® 3 A

Current carrying capacity

The current carrying capacity of the connectors is limited by the thermal load capability of the contact element material including the connections and the insulating parts. The derating curve is therefore valid for currents which flow constantly (non-intermittent) through each contact element of the connector evenly, without exceeding the allowed maximum temperature.

Measuring and testing techniques according to DIN EN 60 512-5

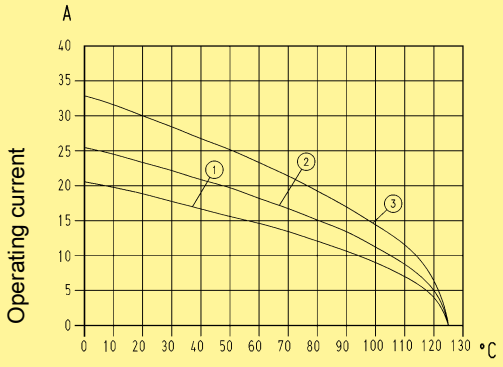

Ambient temperature

Wire gauge:
① 1.0 mm²
② 1.5 mm²
③ 2.5 mm²

Technical characteristics

Specifications	DIN EN 60 664-1 DIN EN 61 984
Approvals	cULus

Inserts

Number of contacts	5 + PE
Electrical data	
acc. to EN 61 984	**16 A 230/400 V 4 kV 3**
Rated current	16 A
Rated voltage conductor - ground	230 V
Rated voltage conductor - conductor	400 V
Rated impulse voltage	4 kV
Pollution degree	3
Pollution degree 2 also	16 A 320/500 V 4 kV 2
Rated voltage	
acc. to UL/CSA	600 V
Insulation resistance	≥ 10^{10} Ω
Material	polycarbonate
Limiting temperatures	-40 °C ... 125 °C
Flammability acc. to UL 94	V 0
Mechanical working life	
- mating cycles	≥ 500

Contacts

Material	copper alloy
Surface	
- hard-silver plated	3 µm Ag
- hard-gold plated	2 µm Au over 3 µm Ni
Contact resistance	≤ 1 mΩ
Crimp terminal	
- mm²	0.14 ... 2.5 mm²
- AWG	26 ... 14
PE screw terminal	
- mm²	2.5 mm²
- AWG	14

Hoods/Housings

Selection of hoods/housings	see chapter 30 / chapter 31

Plastic hoods/housings

Material	polycarbonate
Flammability acc. to UL 94	V 0
Degree of protection acc. to DIN EN 60 529	
for coupled connector	IP 67

Hoods/Housings, metal

Material	zinc die-cast
Degree of protection acc. to DIN EN 60 529	
for coupled connector	IP 44 IP 67 is achieved with seal
screw	09 20 000 9918

Accessories

Crimping tools	chapter 99
Cable clamps	chapter 40
Sealing screw	chapter 40

Number of contacts

5 + ⏚

Identification	Part number Male insert (M)	Part number Female insert (F)	Drawing	Dimensions in mm
Crimp terminal Order crimp contacts separately	**09 12 005 3001**	**09 12 005 3101**	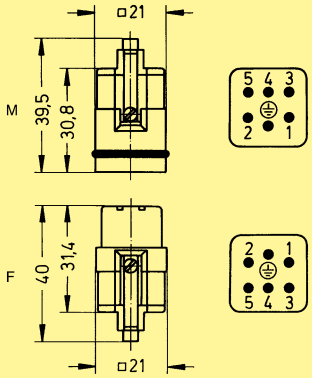 Contact arrangement view from termination side	
Coding pin		09 33 000 9954	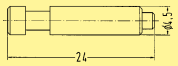	Use of the coding pin prevents incorrect mating to other connectors of the same type. The male pin should be omitted from the opposing cavity in the male insert.

Identification	Wire gauge (mm²)	Part number Male contact	Part number Female contact	Drawing	Dimensions in mm
Crimp contacts Power contacts				Operating contact Identification / Relay contact	
silver plated	0.14-0.37	09 33 000 6127	09 33 000 6227		
	0.5	**09 33 000 6121**	**09 33 000 6220**		
	0.75	**09 33 000 6114**	**09 33 000 6214**		
	1	**09 33 000 6105**	**09 33 000 6205**		
	1.5	**09 33 000 6104**	**09 33 000 6204**		
	2.5	**09 33 000 6102**	**09 33 000 6202**		
gold plated	0.14-0.37	**09 33 000 6117**	**09 33 000 6217**		
	0.5	**09 33 000 6122**	**09 33 000 6222**		
	0.75	**09 33 000 6115**	**09 33 000 6215**		
	1	**09 33 000 6118**	**09 33 000 6218**		
	1.5	**09 33 000 6116**	**09 33 000 6216**		
	2.5	**09 33 000 6123**	**09 33 000 6223**		
Relay contact silver plated	0.75-1	09 33 000 6109			
	1.5	09 33 000 6110			
	2.5	09 33 000 6111			
F.O. contacts for 1 mm plastic fibre		20 10 001 3311	20 10 001 3321	Crimp zone / Crimp zone	

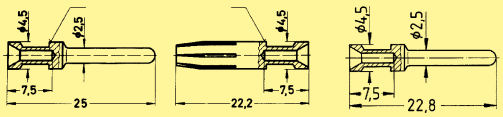

Identification	Wire gauge			Stripping length
no groove	0.14-0.37	mm²	AWG 26-22	7.5 mm
no groove	0.5	mm²	AWG 20	7.5 mm
1 groove*	0.75	mm²	AWG 18	7.5 mm
1 groove	1	mm²	AWG 18	7.5 mm
2 grooves	1.5	mm²	AWG 16	7.5 mm
3 grooves	2.5	mm²	AWG 14	7.5 mm

* on the back crimp collar

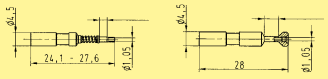

Crimp contacts 0.14 ... 0.37 mm² only used with BUCHANAN crimping tool 09 99 000 0001

Stock items in bold type

thermoplastic / metal

Identification	Part number		Drawing	Dimensions in mm
Hoods **Hoods** Thermoplastic side-entry Cable gland order separately	**09 12 008 0527**	Pg 16	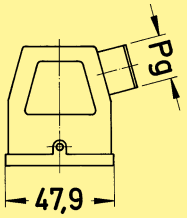	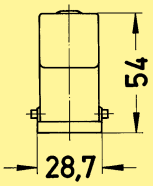
Hoods Thermoplastic top-entry Cable gland order separately	**19 12 008 0429** **09 12 008 0427** **09 12 008 0429**	M 25 Pg 16 Pg 21	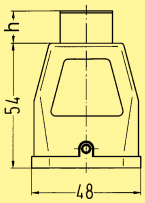 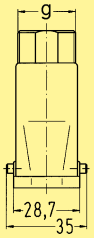	
Hoods Thermoplastic top-entry for flexible conduits Adaptaflex PAFS18	09 12 008 0428	PAFS 18	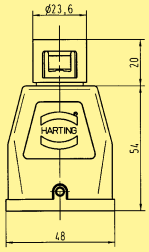 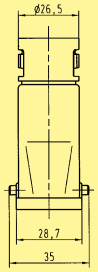	
Cable seal Thermoplastic for hoods Thrust bolt and insert	09 00 000 5059 **19 12 000 5157** 19 12 000 5158 09 00 000 5157 **09 00 000 5158**	Pg 16 M 25 M 25 Pg 21 Pg 21	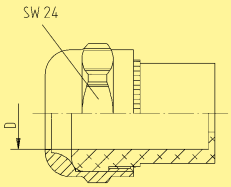	

h	g
14	M 25x1.5
13	Pg 16
13	Pg 21

	cable	
	min.	max.
09 00 000 5059	11.5 mm	15.5 mm
19 12 000 5157	10.5 mm	14 mm
19 12 000 5158	14 mm	17 mm
09 00 000 5157	14 mm	18 mm
09 00 000 5158	17 mm	20.5 mm

Stock items in bold type

thermoplastic / metal

Identification	Part number		Drawing	Dimensions in mm
Hoods				
Hoods Metal side-entry Cable gland order separately	**19 12 008 0526** matt nickel plated **19 12 008 0528**	M 25 M 25	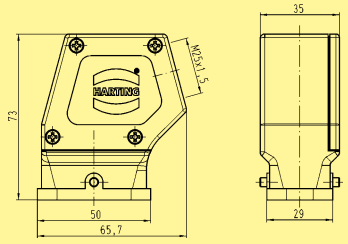	
Hoods Metal side-entry Cable gland order separately	black chromated 19 12 008 0501 black powder coated **19 12 708 0501** matt nickel plated **19 12 008 0502**	M 25 M 25 M 25	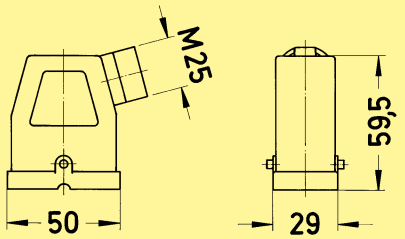	
Hoods Metal top-entry Cable gland order separately	**19 12 008 0426**	M 25	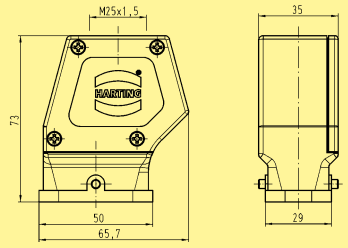	
Cable seal Metal for hoods Thrust bolt and insert	19 12 000 5057 19 12 000 5058	M 25 M 25	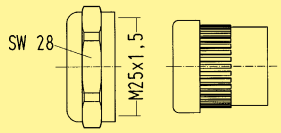	

	cable	
	min.	max.
19 12 000 5057	10.5 mm	14 mm
19 12 000 5058	14 mm	17 mm

Identification	Part number for male insert	Part number for female insert	Drawing	Dimensions in mm
Protection covers Thermoplastic for male insert	without sealing 09 12 008 5407	with sealing 09 12 008 5408	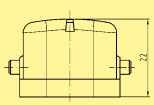	

Power Distribution

Stock items in bold type

thermoplastic / metal

Identification	Part number		Drawing	Dimensions in mm
Housings				
Housings, bulkhead mounting Thermoplastic angled	**09 12 008 0902**	–	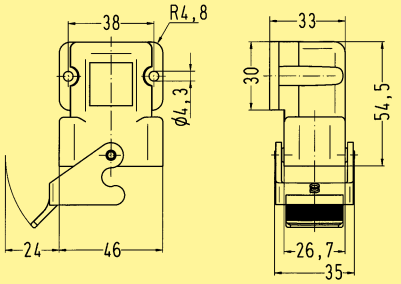	
Housings, bulkhead mounting Thermoplastic	**09 12 008 0327**	–	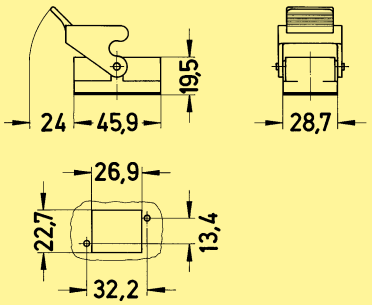	
Gasket for housings bulkhead mounting Han® Q 8/0	09 12 000 9912		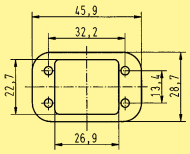	
Housings, surface mounting Thermoplastic angled Cable gland order separately	09 12 008 0901	Pg 16	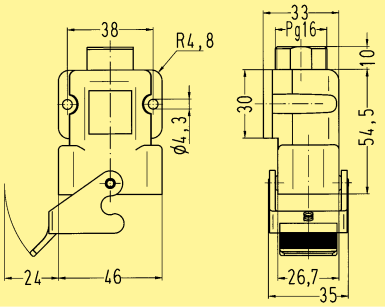	
Hoods, cable to cable Thermoplastic Cable gland order separately	09 12 008 0727 19 12 008 0729	Pg 16 M 25	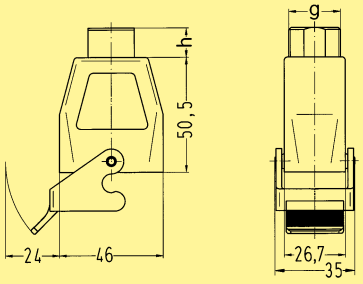	

h	g
13	Pg 16
14	M 25x1.5

Power Distribution

Stock items in bold type

thermoplastic / metal

Identification	Part number		Drawing	Dimensions in mm
Housings **Cable seal** Thermoplastic for housings Thrust bolt and insert	09 00 000 5058 09 00 000 5057	Pg 16 Pg 16	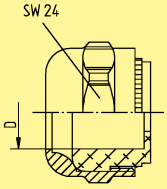	
Housings, **bulkhead mounting** Metal	black chromated **09 12 008 0301** black powder coated **09 12 708 0301** matt nickel plated **09 12 008 0303**		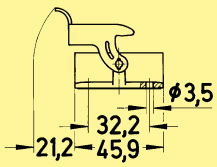 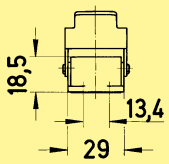	

	cable	
	min.	max.
09 00 000 5058	11.5 mm	15.5 mm
09 00 000 5057	6.5 mm	9.5 mm

Stock items in bold type

Identification		Part number	Drawing	Dimensions in mm
Panel feed through sealings				
Cable diameter	7 - 10 mm²	09 12 000 9969		
	10 - 13 mm²	09 12 000 9970		
	13 - 16 mm²	09 12 000 9971		
	16 - 19 mm²	09 12 000 9972		
	19 - 22 mm²	09 12 000 9973		
	blind grommet	09 12 000 9974	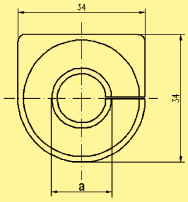	

Stock items in bold type